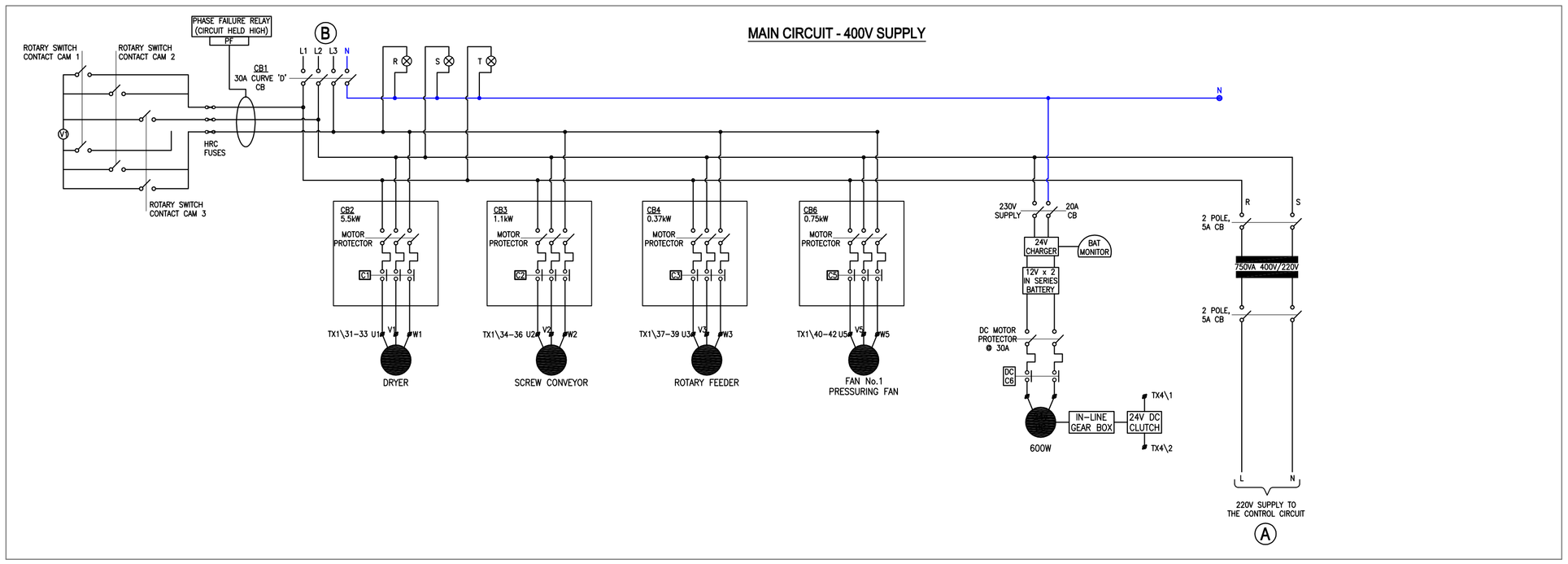

TX1 – TERMINATION BLOCK TX1

TX1\1–2 : EMERGENCY FIELD STOP
TX1\3–4 : PANEL DOOR LIMIT SWITCH 1
TX1\5–6 : PANEL DOOR LIMIT SWITCH 2
TX1\7–8 : PANEL DOOR LIMIT SWITCH 3
TX1\9–10 : PANEL DOOR LIMIT SWITCH 4
TX1\11–12 : PANEL DOOR LIMIT SWITCH 5
TX1\13–14 : EXTERNAL ER SERVICES – SPARE TERMINATION
TX1\15–16 : DRUM OVER TRAVEL/EXPANSION LIMIT SWITCH
TX1\17–18 : TEMPERATURE CONTROLLER T1
TX1\19–20 : TEMPERATURE CONTROLLER T2
TX1\21–22 : TEMP SET POINT REACHED
TX1\23–24 : SPARE
TX1\25–26 : 4–20mA FROM TC1
TX1\27–28 : 4–20mA FROM TC2
TX1\29–30 : SPARE
TX1\31–33 : DRYER
TX1\34–36 : SCREW CONVEYOR
TX1\37–39 : ROTARY FEEDER
TX1\40–42 : PRESSURISING FAN

TX2 – TERMINATION BLOCK TX2

TX2\1–2 : POTENTIAL FREE CONTACT – C4\C2 DRYER READY TEMP CONTROLLED
TX2\3–4 : POTENTIAL FREE CONTACT – C4\C3 THYRISTOR PANEL 1 START
TX2\5–6 : POTENTIAL FREE CONTACT – C4\C4 THYRISTOR PANEL 2 START
TX2\7–8 : POTENTIAL FREE CONTACT – DRYER AUTO RUN
TX2\9–10 : POTENTIAL FREE CONTACT – DRYER AUTO STOP
TX2\11–12 : PRESSURE FAN FLOW SWITCH

TX3 – TERMINATION BLOCK TX3

TX3\1–2 : 24V DC (PULSE) REMOTE START SEQ
TX3\3–4 : 24V DC (PULSE) REMOTE STOP SEQ

TX4 – TERMINATION BLOCK TX4

TX4\1–2 : 24V DC CLUTCH – BACK-UP DRIVE
TX4\3–4 : 24V DC MOTOR TERMINALS

TX5 – TERMINATION BLOCK TX5

TX5\1–2 : 230VAC TO BATTERY CHARGER
TX5\3–4 : SPARE

TX6 – TERMINATION BLOCK T6

TX6\1–2 : ISOLATOR AUX DRYER
TX6\3–4 : ISOLATOR AUX SCREW CONVEYOR
TX6\5–6 : ISOLATOR AUX ROTARY FEEDER
TX6\7–8 : ISOLATOR AUX PRESSURE FAN
TX6\9–10 : ISOLATOR AUX 24VDC DRIVE

LEGENDS DESCRIPTION

PFR – PHASE FAILURE RELAY
RE – RELAY EMERGENCY (PANEL DOORS & ER SERVICES

R1 – RELAY – MANUAL/AUTO SELECTION
R2 – RELAY – LOCAL/REMOTE SELECTION
R3 – RELAY – [C1] – AUTO START RETAIN CONTACT
[C2] – AUTO SEQ DRYER START CONTACT
[C3] – TIMER 1 – START CONTACT
[C4] – AUTO STOP INTERLOCK
R4 – RELAY – [C1] – REMOTE START PROCESS RETAIN CONTACT
[C2] – AUTO START PROCESS INDICATION
[C3] – AUTO STOP PROCESS INDICATION
R5 – RELAY – [C1] – POTENTIAL FREE CONTACT DRYER START SIGNAL TO PLC
[C2] – POTENTIAL FREE CONTACT DRYER STOP SIGNAL TO PLC
R6 – RELAY – [C1] – AUTO STOP SEQ RETAIN CONTACT
[C2] – TIMER 2 START CONTACT
[C3] – AUTO STOP SEQ – SCREW CONVEYOR STOP
[C4] – REMOTE STOP PROCESS RETAIN CONTACT
R7 – RELAY – [C1] – SCREW CONVEYOR STOP CONTACT
R8 – RELAY – [C1] – DRUM TRAVEL LIMIT
[C2] – HEATER STOP CONTACT
R9 – RELAY – [C1] – OVER TEMP RELAY THYRISTOR T1
R10 – RELAY – [C1] – OVER TEMP RELAY THYRISTOR T2
R11 – RELAY – [C1] – HEATER RETAIN CONTACT T1
[C2] – POTENTIAL FREE CONTACT – THYRISTOR T1 START
[C3] – POTENTIAL FREE CONTACT – HEATER ON AND ON TEMP
R12 – RELAY – [C1] – HEATER RETAIN CONTACT T2
[C2] – POTENTIAL FREE CONTACT – THYRISTOR T1 START
[C3] – POTENTIAL FREE CONTACT – HEATER ON AND ON TEMP

T1 – TIMER 1 – [C1] – SCREW CONVEYOR START
[C2] – ROTARY FEEDER START
T2 – TIMER 2 – [C1] – HEATER STOP TIMER AFTER SCREW CONVEYOR
T3 – TIMER 3 – [C1] – DRYER TIMER STOP CONTACT
[C2] – AUTO START SEQ RESET
[C3] – AUTO STOP SEQ RESET
T4 – TIMER 4 – [C1] – 24V DC MOTOR DELAY START
[C2] – 24V DC MOTOR RUN TIMER
T5 – TIMER 5 – TIME DELAY ON CONTROL CIRCUIT POWER-UP AND CONTROL

RS1 – RELAY 24V – PLC REMOTE START – PULSE
RS2 – RELAY 24V – PLC REMOTE START – PULSE

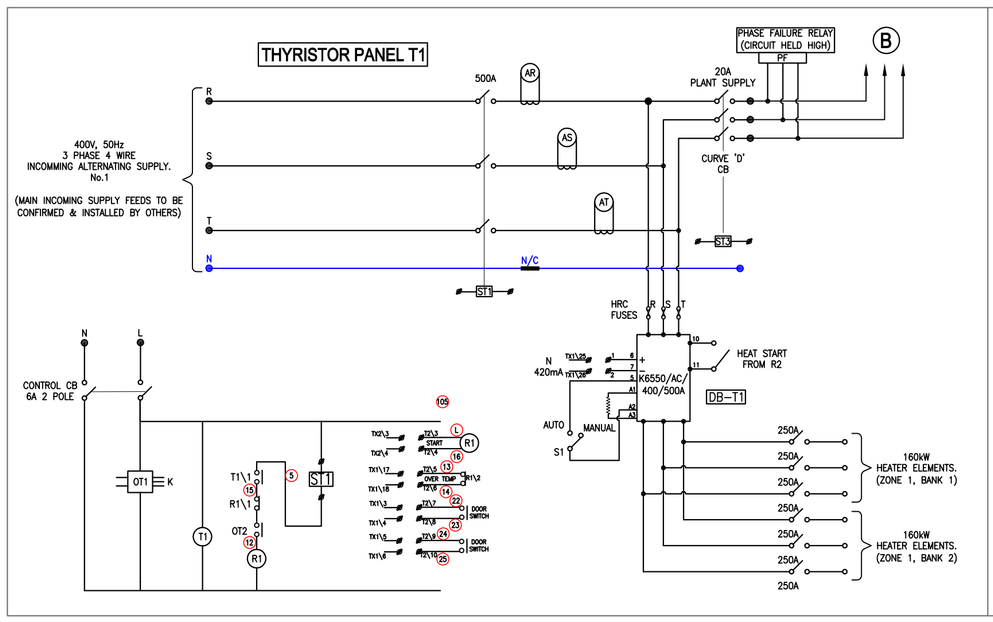

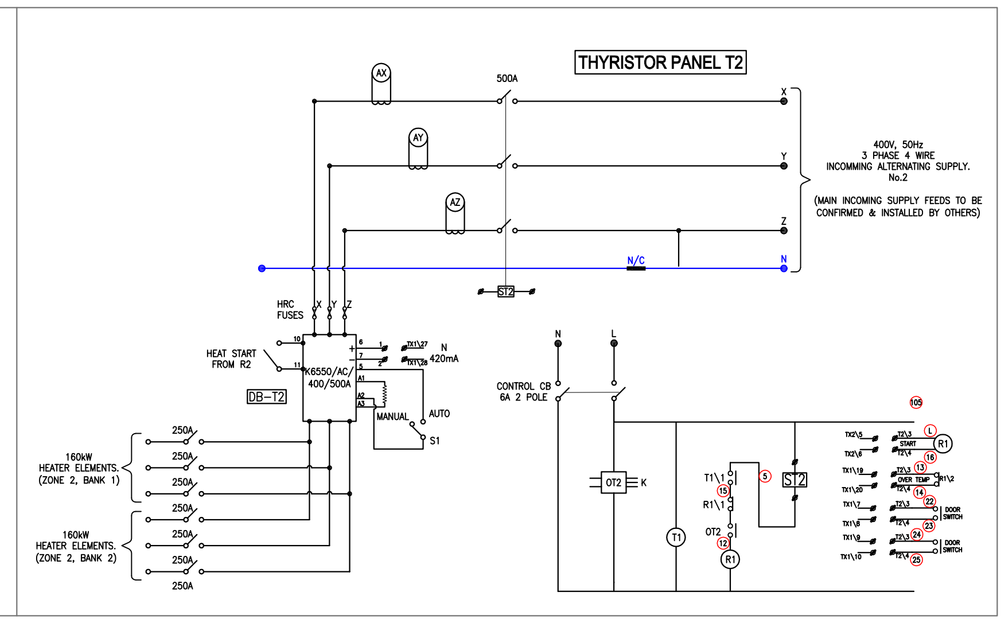

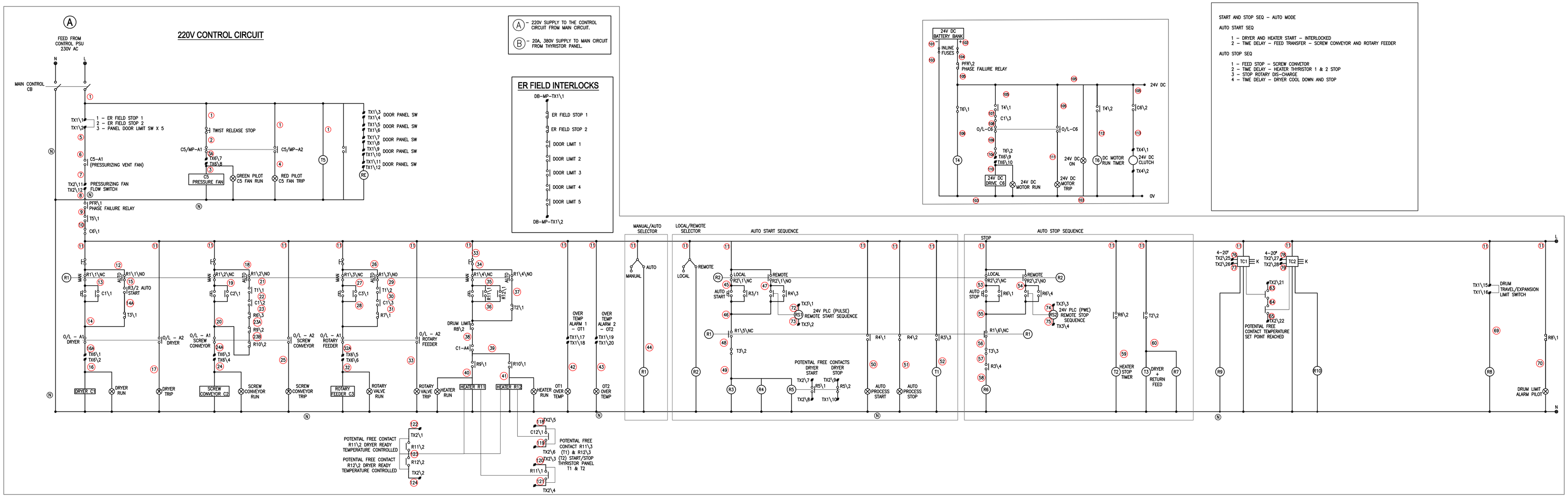

(A) – 220V SUPPLY TO THE CONTROL CIRCUIT FROM MAIN CIRCUIT.

(B) – 20A, 380V SUPPLY TO MAIN CIRCUIT FROM THYRISTOR PANEL.

ER FIELD INTERLOCKS

DB-MP-TX1\1
ER FIELD STOP 1
ER FIELD STOP 2
DOOR LIMIT 1
DOOR LIMIT 2
DOOR LIMIT 3
DOOR LIMIT 4
DOOR LIMIT 5
DB-MP-TX1\2

START AND STOP SEQ – AUTO MODE

AUTO START SEQ

1 – DRYER AND HEATER START – INTERLOCKED
2 – TIME DELAY – FEED TRANSFER – SCREW CONVEYOR AND ROTARY FEEDER

AUTO STOP SEQ

1 – FEED STOP – SCREW CONVEYOR
2 – TIME DELAY – HEATER THYRISTOR 1 & 2 STOP
3 – STOP ROTARY DIS-CHARGE
4 – TIME DELAY – DRYER COOL DOWN AND STOP